3.4 DARLINGTONOV SPOJ TRANZISTORA

BIP T

↳ najvažniji parametar je β

jako bitno da je što veći

↓

možemo pojačati dodavanjem novih tranzistora

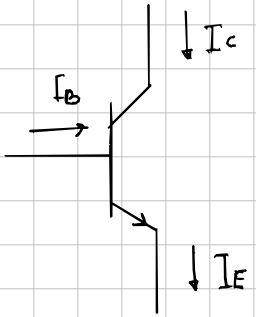

i onda samo 1 vidimo izvana

⟹

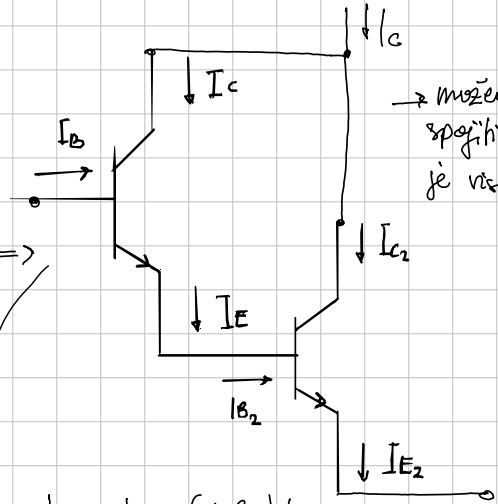

→ možemo ih spojiti jer je visoko pod. pn spoj

$$I_{E_1} = I_{B_1} + I_{C_1} = (1+\beta_1)\, I_{B_1}$$

$$I_{C_2} = \beta_2 \cdot I_{B_2} = \beta_2 \cdot I_{E_1} = \beta_2 \cdot (1+\beta_1) \cdot I_{B_1}$$

$$\approx I_{B_1} \cdot \underbrace{\beta_1 \cdot \beta_2}_{\text{„novi beta"}}$$

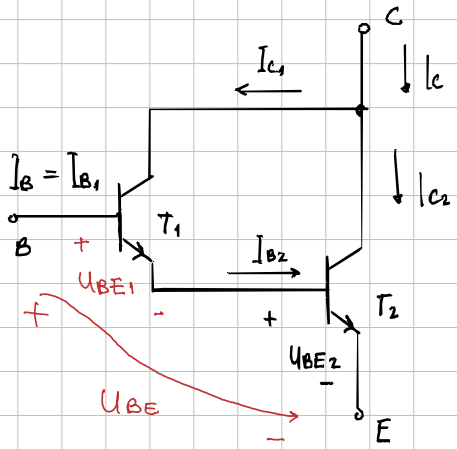

$$I_C = I_{C_1} + I_{C_2} = I_{C_1} + \beta_1 \cdot I_{B_2} = I_{C_1} + \beta_1 I_{C_1}$$

$$\parallel$$

$$\frac{I_{C_2}}{\beta^2} \Longrightarrow I_C \approx I_{C_2}$$

$$\boxed{I_C = \beta_1 \beta_2 I_B}$$

$$\Longrightarrow U_{BE} = U_{BE_1} + U_{BE_2}$$

$$U_{BE} = 1.4\,V$$

Darlingtov spoj u pojačalu u spoju zajedničkog sljedila

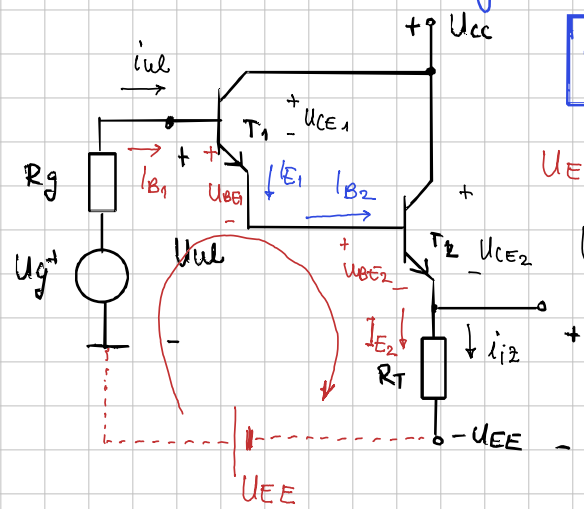

STATIKA

S7C

$I_{B_2} + I_{C_2}$
$\parallel$

$$U_{EE} = I_{B_1} \cdot R_G + U_{BE_1} + U_{BE_2} + I_{E_2} \cdot R_T$$

$$U_{EE} = I_{B_1} \cdot R_G + \overbrace{U_{BE_1} + U_{BE_2}}^{U_{BE}} + I_{B_2}(1+\beta_2) R_T$$

$$I_{E_1} = I_{B_2}$$

$$I_{B_1} + I_{C_1} = I_{B_2} \rightarrow I_{B_1}(1+\beta_1) = I_{B_2}$$

$$U_{EE} = I_{B_1}\left[R_G + (1+\beta_1)(1+\beta_2) R_T\right] + U_{BE}$$

$$\Rightarrow \boxed{I_{BQ_1} = \frac{U_{EE} - U_{BE}}{\cancel{R_G} + (\cancel{1}+\beta_1)(\cancel{1}+\beta_2) R_T}} = \frac{U_{EE} - 2U_\gamma}{\beta_1 \beta_2 R_T}$$

zanemarivo

$$-U_{CC} + U_{CEQ_2} + R_T \cdot I_{E_2} - U_{EE} = 0$$

$I_E \approx I_C$

$$-U_{CC} + U_{CEQ_2} + R_T \cdot I_{CQ_2} - U_{EE} = 0 \rightarrow \boxed{U_{CEQ_2} = U_{CC} - (-U_{EE}) - R_T \cdot I_{CQ_2}}$$

$$-U_{CC} + U_{CEQ_1} + U_{BEQ_2} + R_T \cdot I_{CQ_2} = 0 \rightarrow \boxed{U_{CEQ_1} = U_{CC} - U_{BEQ_2} - R_T \cdot I_{CQ_2} + U_{EE}}$$

$$U_{CEQ} > U_{BEQ} \ldots \text{NAP}$$

Primjer:

$U_{CC} = U_{EE} = 10V$ $\quad R_G = 1k\Omega$ $\quad R_T = 2k\Omega$ $\quad \beta_1 = 60$ $\quad \beta_2 = 80$

$U_{\gamma_1} = U_{\gamma_2} = 0.7V$

$$I_{BQ_1} = \frac{10V - 1.4V}{10^3 + 61 \cdot 81 \cdot 2 \cdot 10^3} = 870.18\,nA$$

$$I_{CQ_2} = \beta_1 \beta_2 I_{BQ_1}$$

$I_{CQ_2} = 4.177\,mA \rightarrow I_{BQ_2} = 53\,\mu A$

$I_{CQ_1} = 52.21\,\mu A$

$$U_{CEQ_1} = 10V + 10V - 0.7V - 2 \cdot 4.177V$$

$$U_{CEQ_1} = 10.95V$$

$$U_{CEQ_2} = 10 + 10 - 2 \cdot 4.177 = 11.646V$$

DINAMIKA

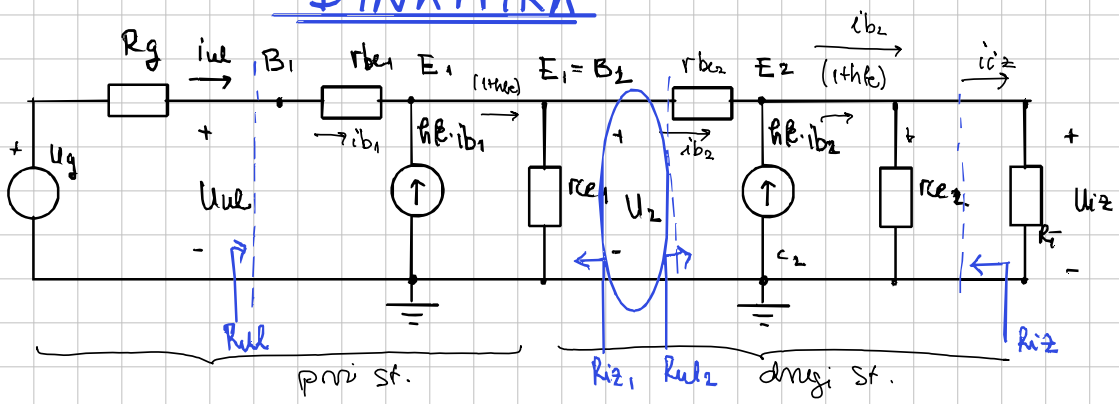

2. stupanj

$$A_{I_2} = \frac{i_{iz}}{i_{ul}} = \frac{i'_{iz}}{i'_{b_2}}$$

$$i_{iz} = (1+h_{fe})\, i_{b_2} \cdot \frac{r_{ce_2}}{r_{ce_2}+R_T} \quad \Big\} \quad \boxed{A_{I_2} = (1+h_{fe})_2 \cdot \frac{r_{ce_2}}{r_{ce_2}+R_T}}$$

$$R_{ul_2} = \frac{U_2}{i_{b_2}} \; ; \quad U_2 = i_{b_2} \cdot r_{be_2} + (1+h_{fe})\, i_{b_2} \cdot (r_{ce_2} \parallel R_T) \quad \Big\} \quad \boxed{R_{ul_2} = r_{be_2} + (1+h_{fe})_2 (r_{ce_2} \parallel R_T)}$$

1. stupanj

$$A_{I_1} = \frac{i'_{iz_1}}{i_{ul}} = \frac{i_{b_2}}{i_{b_1}}$$

$$i_{b_2} = (1+h_{fe})\, i_{b_1} \cdot \frac{r_{ce_1}}{r_{ce_1}+R_{ul_2}} \quad \Big\} \quad \boxed{A_{I_1} = (1+h_{fe})_1 \cdot \frac{r_{ce_1}}{r_{ce_1}+R_{ul_2}}}$$

$$R_{ul} = \frac{U_{ul}}{i_{b_1}} \; ; \quad U_{ul} = i_{b_1} \cdot r_{be_1} + (1+h_{fe}) \cdot i_{b_1} (r_{ce_1} \parallel R_{ul_2}) \quad \Big\} \quad \boxed{R_{ul} = r_{be_1} + (1+h_{fe})(r_{ce_1} \parallel R_{ul_2})}$$

$$A_I = A_{I_1} \cdot A_{I_2} = \frac{i_{iz}}{i_{ul}}$$

$$A_V = \frac{U_{iz}}{U_{ul}} = \frac{i_{iz} \cdot R_T}{i_{ul} \cdot R_{ul}} \Rightarrow \boxed{A_V = A_I \cdot \frac{R_T}{R_{ul}}}$$

⇒ Izlazni otpori → zahtjevaju nove sheme:

1. stupanj:

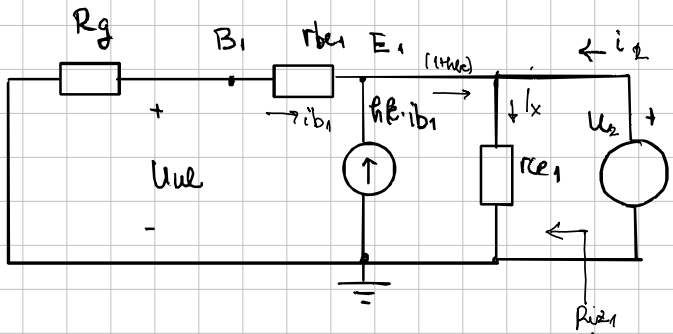

$$R_{iz_1} = \frac{U_2}{i_1} \qquad U_2 = -i_{b_1} \cdot (R_g + r_{be_1})$$

$$I_x = (1+h_{fe}) \cdot \frac{1}{r_{ce_1}} \cdot i_{b_1}$$

$$I_2 = I_x - (1+h_{fe}) \cdot i_{b_1}$$

$$I_2 = (1+h_{fe})\left(\frac{1}{r_{ce_1}} - 1\right) i_{b_1}$$

$$R_{iz_1} = \frac{R_g + r_{be_1}}{(1+h_{fe})\left(1 - \frac{1}{r_{ce_1}}\right)} \Rightarrow \boxed{R_{iz_1} = \frac{R_g + r_{be_1}}{1+h_{fe}} \parallel r_{ce_1}}$$

2. stupanj:

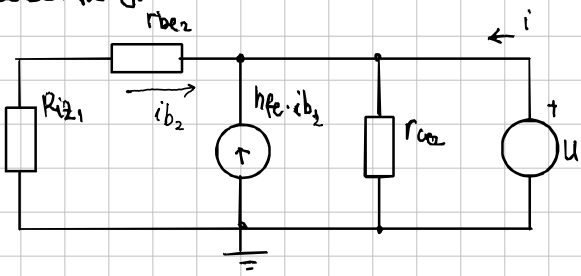

isto kao gore

$$\dots \Rightarrow \boxed{R_{iz} = \frac{R_{iz_1} + r_{be_2}}{1+h_{fe}} \parallel r_{ce_2}}$$

Primjer 3.6) SZC s Darlingtonim spojem

$A_V = ?$ $A_I = ?$ $R_{ul} = ?$ $R_{iz} = ?$ $h_{fe_1} = 60$ $h_{fe_2} = 80$

$U_{A_1} = U_{A_2} = 200V$ $U_T = 25mV$

$A_V = A_I \cdot \frac{R_T}{R_{ul}} \rightarrow R_{ul} = r_{be_1} + (1+h_{fe_1})(r_{ce_1} \| R_{ul_2})$ ✓

$A_I = A_{I_1} \cdot A_{I_2}$

$A_{I_1} = (1+h_{fe_1}) \frac{r_{ce_1}}{r_{ce_1} + R_{ul_2}}$

$A_{I_2} = (1+h_{fe_2}) \frac{r_{ce_2}}{r_{ce_2} + R_T}$

$R_{ul_2} = r_{be_2} + (1+h_{fe_2})(r_{ce_2} \| R_T)$ ✓

$R_{iz_1} = \frac{R_g + r_{be_1}}{1+h_{fe_1}} \| r_{ce_1}$ $R_{iz} = \frac{R_{iz_1} + r_{be_2}}{1+h_{fe_2}} \| r_{ce_2}$

3.5

$I_{BQ_1} = 0.87\mu A$ $r_{be_2} = \frac{U_T}{I_{BQ}}$ $I_{BQ_2} = 53.1\mu A$

$I_{CQ_1} = 52.2\mu A$ $r_{ce} = \frac{U_A}{I_C}$ $I_{CQ_2} = 4.18mA$

$U_{CEQ_1} = 10.95V$ $U_{CEQ_2} = 11.646V$

$r_{be_1} = 28.736k\Omega$ $r_{be_2} = 470.81\Omega$

$r_{ce_1} = 3.83M\Omega$ $r_{ce_2} = 3.77M\Omega$

$R_{ul_2} = 164.38k\Omega \Rightarrow \boxed{R_{ul} = 9.67M\Omega}$ ✓

$R_{iz_1} = 651\Omega \Rightarrow \boxed{R_{iz} = 13.85\Omega}$ ✓

$A_{I_1} = 58.5$ $A_{I_2} = 80.96 \Rightarrow \boxed{A_I = 4735.3}$ ✓

$\boxed{A_V = 0.979}$ $< 1, \approx 1$ ✓

Podešavanje RT s jednim naponom napajanja

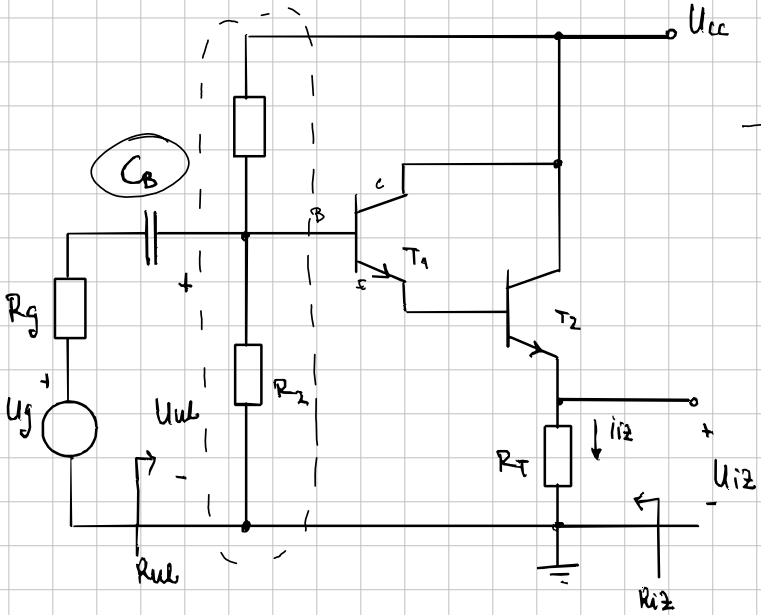

→ako ne dovedimo neg napon na E, odnosno ako želimo da nam emiter (E) bude na masi, moramo osigurati poz potencijal na B

u dinamici:

$R_B = R_1 \parallel R_2$

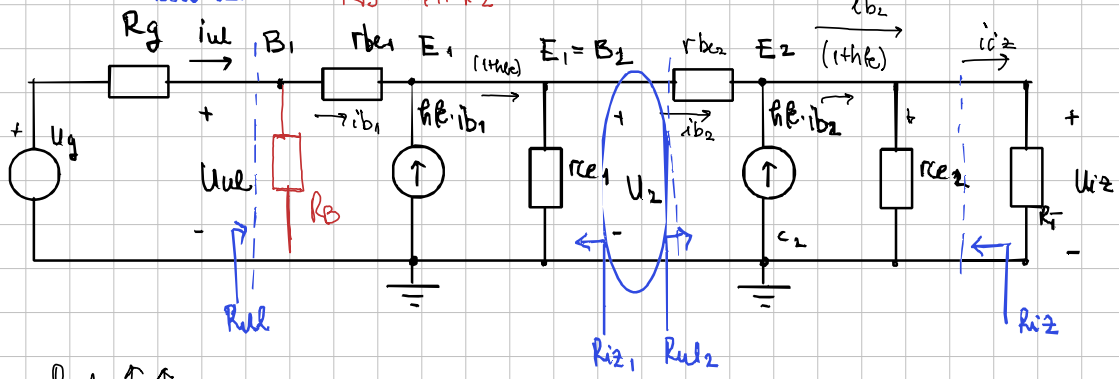

Rul ↑↑

$R_{ul}' = R_{ul} \parallel R_B$ gubimo mojstvo jako velikog Rul

↳ bitno manji Rul

Darlington u spoju SZE

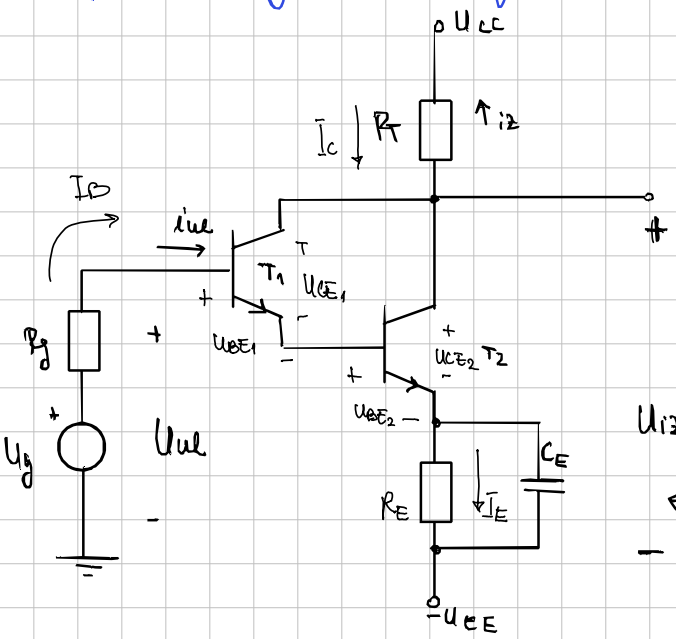

STATIKA

$$I_{BQ_1}\cdot R_g + U_{BE_1} + U_{BE_2} + I_E\cdot R_E - U_{EE} = 0$$

$$I_{E_2} = (1+\beta_2)\, I_{BQ_2}$$

$$I_{BQ_2} = I_{E_1} = (1+\beta_1)\, I_{B_1}$$

$$\Rightarrow I_{E_2} = (1+\beta_1)(1+\beta_2)\, I_{B_1}$$

$$\boxed{I_{BQ_1} = \frac{U_{EE} - U_{BE_1} - U_{BE_2}}{R_g + (1+\beta_1)(1+\beta_2)R_E}}$$

$$-U_{CC} + I_{CQ_2}\cdot R_T + U_{CEQ_2} + I_{CQ_2}\cdot R_E - U_{EE} = 0$$

$$\Rightarrow \boxed{U_{CEQ_2} = U_{CC} + U_{EE} - I_{CQ_2}(R_T + R_E)}$$

$$-U_{CC} + I_{CQ_2}\cdot R_T + U_{CEQ_1} + U_{BEQ_2} + R_E\cdot I_{CQ_2} - U_{EE} = 0$$

$$\Rightarrow \boxed{U_{CEQ_1} = U_{CC} + U_{EE} - U_{BEQ_2} - I_{CQ_2}(R_T + R_E)}$$

DINAMIKA

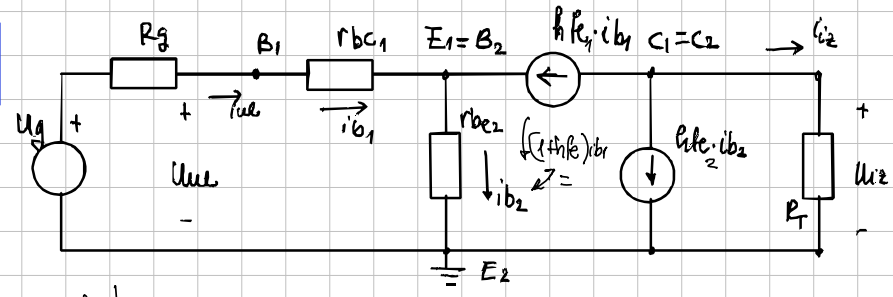

$$A_I = \frac{i_{iz}}{i_{ul}} = \frac{i_{iz}}{i_{b_1}}$$

$$i_{iz} = -(h_{fe_1}\cdot i_{b_1} + h_{fe_2}\cdot i_{b_2})$$

$$i_{b_2} = (1+h_{fe_1})\, i_{b_1}$$

$$i_{iz} = -(h_{fe_1}\cdot i_{b_1} + h_{fe_2}\cdot(1+h_{fe_1})\cdot i_{b_1})$$

$$\Rightarrow \boxed{A_I = -\left[h_{fe_1} + h_{fe_2}(1+h_{fe_1})\right]} \approx -h_{fe_1}\cdot h_{fe_2}$$

$$R_{ul} = \frac{U_{ul}}{i_{ul}}$$

$$U_{ul} = i_{b_1}\cdot r_{be_1} + (1+h_{fe_1})\, i_{b_1}\cdot r_{be_2}$$

$$= i_{b_1}\left[r_{be_1} + (1+h_{fe_1})\cdot r_{be_2}\right]$$

$$R_{ul} = \frac{U_{ul}}{i_{b_1}} \rightarrow \boxed{R_{ul} = r_{be_1} + (1+h_{fe_1})\, r_{be_2}}$$

$$\Downarrow$$

$$R_{ul} \approx 2 r_{be_1}$$

$$I_{BQ_2} = (1+\beta_1)\, I_{BQ_1} \rightarrow r_{be_2} = \frac{U_T}{I_{BQ_2}} = \frac{U_T}{(1+\beta)\, I_{BQ_1}} \approx \frac{r_{be_1}}{1+h_{fe_1}}$$

$$A_V = \frac{U_{iz}}{U_{ul}} \approx \frac{-h_{fe_2}\cdot i_{b_2} R_T}{i_{b_1}\cdot R_{ul}} = \frac{-h_{fe_2}\cdot(1+h_{fe_1})\, i_{b_1} R_T}{i_{b_1}\cdot R_{ul}} \approx \boxed{A_V = -h_{fe_2}\, h_{fe_1}\, \frac{R_T}{2 r_{be_1}}}$$

$$A_V \approx -h_{fe_2}\cdot \frac{R_T}{2 r_{be_1}}$$

Primjer 3.7)